Armstrong® PT-400 Series Vertical Steel Pump Trap

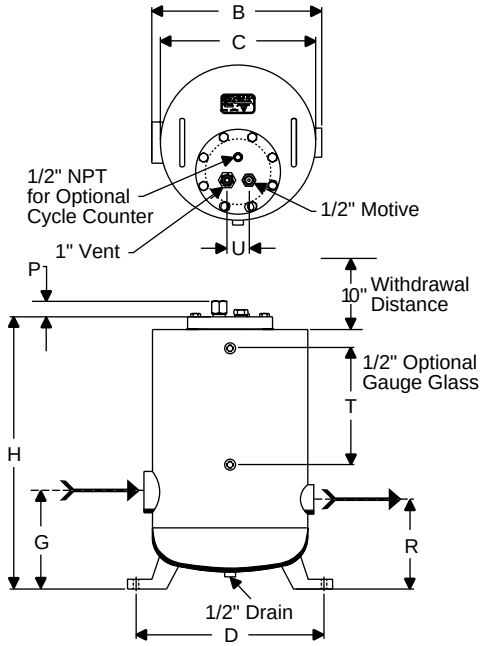



The Armstrong PT-400 Series Vertical Pump Trap is the low maintenance, non-electric solution to move condensate or other liquids from low points, low pressures or vacuum spaces to an area of higher elevation or pressure. Condensate can be returned at temperatures well above the 210°F (99°C) limit of conventional electric condensate pumps without the headaches of leaking seals or cavitation problems.

Features

- Non-electric—Uses inexpensive steam, air or gas to operate the pump trap
- Explosion proof—Intrinsically safe
- ASME code stamped carbon steel or stainless steel body vessel
- Low maintenance—No leaking seals, impeller or motor problems
- All stainless steel internals with durable Inconel X-750 springs
- Externally removable/replaceable seats—Valve and seats can be replaced or cleaned without removing pump cap from body

For a fully detailed certified drawing, refer to CDF #1004.

PT-400 Pumping Trap Physical Data

Model Number	PT-404		PT-406		PT-408		PT-412	
	in	mm	in	mm	in	mm	in	mm
"B"	17-1/2	445	17-1/2	445	17-1/2	445	17-1/2	445
"C"	16	406	16	406	16	406	16	406
"D"	19-3/8	492	19-3/8	492	19-3/8	492	19-3/8	492
"G"	10	254	10	254	10	254	10	254
"H"	28	711	28	711	28	711	28	711
"P"	1-5/8	41	1-5/8	41	1-5/8	41	1-5/8	41
"R"	9-1/4	235	9-1/4	235	9-1/4	235	9-1/4	235
"T"	12	305	12	305	12	305	12	305
"U"	2-1/4	57	2-1/4	57	2-1/4	57	2-1/4	57
Weight lb (kg)	166 (75)		166 (75)		166 (75)		166 (75)	
Number of Body/ Cap Bolts	8		8		8		8	
Check Valve Conn. in (mm)	**1 (25)**		**1-1/2 (40)**		**2 (50)**		**3 (75)**	
Bronze Check Valves lb (kg)	4 (2)		9 (4)		16 (7)		29 (13)	
Stainless Steel Check Valves lb (kg)	4 (2)		9 (4)		15 (7)		38 (17)	

Maximum Allowable Pressure (Vessel Design) 150 psig @ 650°F (10 bar @ 343°C)
Maximum Operating Pressure 125 psig (9 bar)

All dimensions and weights are approximate. Use certified print for exact dimensions. Design and materials are subject to change without notice.

Armstrong Steam and Condensate Group, 221 Armstrong Blvd., P.O. Box 408, Three Rivers, MI 49093 – USA Phone: (269) 279-3601 Fax: (269) 279-3150
www.armstrong-intl.com
Next

PT-400 Series Vertical Steel Pump Trap

PT-400 Pumping Trap Connection Sizes

Model	Vertical Steel							
	PT-404		PT-406		PT-408		PT-412	
	in	mm	in	mm	in	mm	in	mm
Inlet Connection	1	25	1-1/2	40	2	50	3	80
Outlet Connection	1	25	1-1/2	40	2	50	2	50
Motive Pressure Connection	1/2	15	1/2	15	1/2	15	1/2	15
Vent Connection	1	25	1	25	1	25	1	25
Optional Gauge Glass Connection	1/2	15	1/2	15	1/2	15	1/2	15

PT-400 Pumping Trap Capacities

Motive Pressure		Total Lift or Back Pressure		PT-404 (12" Fill Head) 1" x 1"				PT-406 (12" Fill Head) 1-1/2" x 1-1/2"				PT-408 (12" Fill Head) 2" x 2"				PT-412 (12" Fill Head) 3" x 2"			
				Steam Motive		Air Motive		Steam Motive		Air Motive		Steam Motive		Air Motive		Steam Motive		Air Motive	
psig	bar	psig	bar	lb/hr	kg/hr	lb/hr	kg/hr	lb/hr	kg/hr	lb/hr	kg/hr	lb/hr	kg/hr	lb/hr	kg/hr	lb/hr	kg/hr	lb/hr	kg/hr
15	1.0			1,900	862	2,250	1,021	3,100	1,406	3,350	1,520	4,500	2,041	4,850	2,200	7,500	3,402	8,100	3,674
25	1.7			2,500	1,134	2,650	1,202	4,600	2,086	4,875	2,211	6,600	2,994	7,000	3,175	11,000	4,990	11,650	5,284
50	3.5	5	0.34	3,100	1,406	3,225	1,463	4,900	2,222	5,100	2,313	7,100	3,220	7,375	3,345	11,700	5,307	12,150	5,511
75	5			3,400	1,542	3,500	1,588	5,200	2,359	5,300	2,404	7,200	3,266	7,400	3,357	12,000	5,443	12,350	5,602
100	7			3,500	1,588	*	*	5,400	2,449	*	*	7,300	3,311	*	*	12,100	5,488	*	*
125	8.5			3,600	1,633	*	*	5,500	2,495	*	*	7,400	3,357	*	*	12,200	5,534	*	*
25	1.7			2,200	999	2,525	1,145	3,500	1,588	4,025	1,826	5,400	2,449	6,200	2,812	7,200	3,266	8,275	3,753
50	3.5			2,600	1,179	2,800	1,270	4,100	1,860	4,425	2,007	6,300	2,857	6,800	3,084	10,400	4,717	11,250	5,103
75	5	15	1	2,800	1,270	2,950	1,338	4,400	1,996	4,750	2,155	6,500	2,948	6,900	3,130	10,800	4,899	11,450	5,194
100	7			3,100	1,406	*	*	4,800	2,177	*	*	6,700	3,039	*	*	11,000	4,990	*	*
125	8.5			3,200	1,451	*	*	4,900	2,222	*	*	6,800	3,084	*	*	11,200	5,080	*	*
35	2.5			2,000	907	2,350	1,066	2,900	1,315	3,425	1,554	4,200	1,905	4,950	2,245	6,900	3,130	8,150	3,697
50	3.5			2,400	1,088	2,675	1,213	4,000	1,814	4,500	2,041	5,800	2,631	6,400	2,903	9,700	4,400	10,850	4,921
75	5	25	1.5	2,600	1,179	2,800	1,270	4,300	1,950	4,550	2,064	6,000	2,721	6,500	2,948	10,000	4,536	10,900	4,944
100	7			2,800	1,270	*	*	4,700	2,132	*	*	6,100	2,767	*	*	10,200	4,626	*	*
125	8.5			2,900	1,315	*	*	4,800	2,711	*	*	6,400	2,903	*	*	10,400	4,717	*	*
50	3.5			1,900	862	2,350	1,066	3,300	1,451	4,050	1,837	4,350	1,973	5,350	2,427	5,800	2,631	7,125	3,232
60	4			2,200	999	2,600	1,179	3,600	1,633	4,250	1,927	5,100	2,313	6,000	2,722	6,900	3,130	8,150	3,697
75	5	40	3	2,400	1,088	2,675	1,213	4,000	1,814	4,475	2,030	5,700	2,585	6,375	2,892	7,600	3,447	8,500	3,856
100	7			2,500	1,135	*	*	4,200	1,905	*	*	6,000	2,721	*	*	8,100	3,674	*	*
125	8.5			2,700	1,225	*	*	4,500	2,041	*	*	6,200	2,612	*	*	8,500	3,856	*	*
70	4.5			1,800	816	2,400	1,088	3,200	1,451	4,300	1,950	3,800	1,724	5,050	2,291	5,000	2,268	6,650	3,016
75	5			2,000	907	2,450	1,111	3,500	1,588	4,650	2,109	4,100	1,859	5,175	2,347	5,400	2,450	6,900	3,130
100	7	60	4	2,300	1,233	*	*	3,700	1,678	*	*	4,500	2,041	*	*	6,000	2,722	*	*
125	8.5			2,400	1,088	*	*	3,800	1,724	*	*	4,800	2,177	*	*	6,400	2,903	*	*

NOTES: Published capacities are based on the use of external check valves supplied by Armstrong. Fill head measured from drain point to top of pump cap. See figures on page CRE-25. Although motive pressures are shown at high pressure differentials (difference between motive inlet pressure and total lift or back pressure), it is preferable to use a motive pressure of 10 - 15 psig (0.65 - 1 bar) above discharge (outlet) pressure. This ensures longevity of economical (brass) check valves and reduces both venting time and temperature differential (on steam). If a higher differential is used, stainless steel check valves are recommended.
*Consult factory.

PT-400 Series Pumping Trap Materials

Name of Part	Series PT-400*
Body and Cap	Fabricated steel 150 psi ASME Sec. VIII design "U" stamped
Cap Gasket	Compressed non-asbestos
Bolts	SA-449 steel
Nuts	None
Inlet Valve Assembly	Stainless steel
Vent Valve Assembly	Stainless steel
Valve Assembly Washers	Zinc-plated steel
Plug	Steel
Mechanism Assembly	Stainless steel
Springs	Inconel X-750

*Series PT-400 is available in all stainless steel. Consult factory.

PT-400 Capacity Conversion Factors for Other Fill Heads

Fill Head		in	mm	in	mm	in	mm	in	mm	in	mm
		0	0	6	152	12	305	24	610	36	914
Model	PT-404	0.7		0.85		1.0		1.3		1.4	
	PT-406	0.7		0.85		1.0		1.2		1.35	
	PT-408	0.7		0.85		1.0		1.2		1.35	
	PT-412	0.7		0.85		1.0		1.08		1.2	

NOTES: Fill head is measured from drain point to top of cap. See figures on page CRE-25. Discharge per cycle is typically 7.8 gallons for PT-400 Series.

All dimensions and weights are approximate. Use certified print for exact dimensions. Design and materials are subject to change without notice.